Drawing

	Batch #	Appliance part#
Hendi B.V. Innovatielaan 6 6745 XS De Klomp The Netherlands	301291 And up	149508
	Description	
	Green Fire with 2 burners	

Date	10-04-2025	**Revision #**	Revision version
Revision	First bill of materials (BOM)		

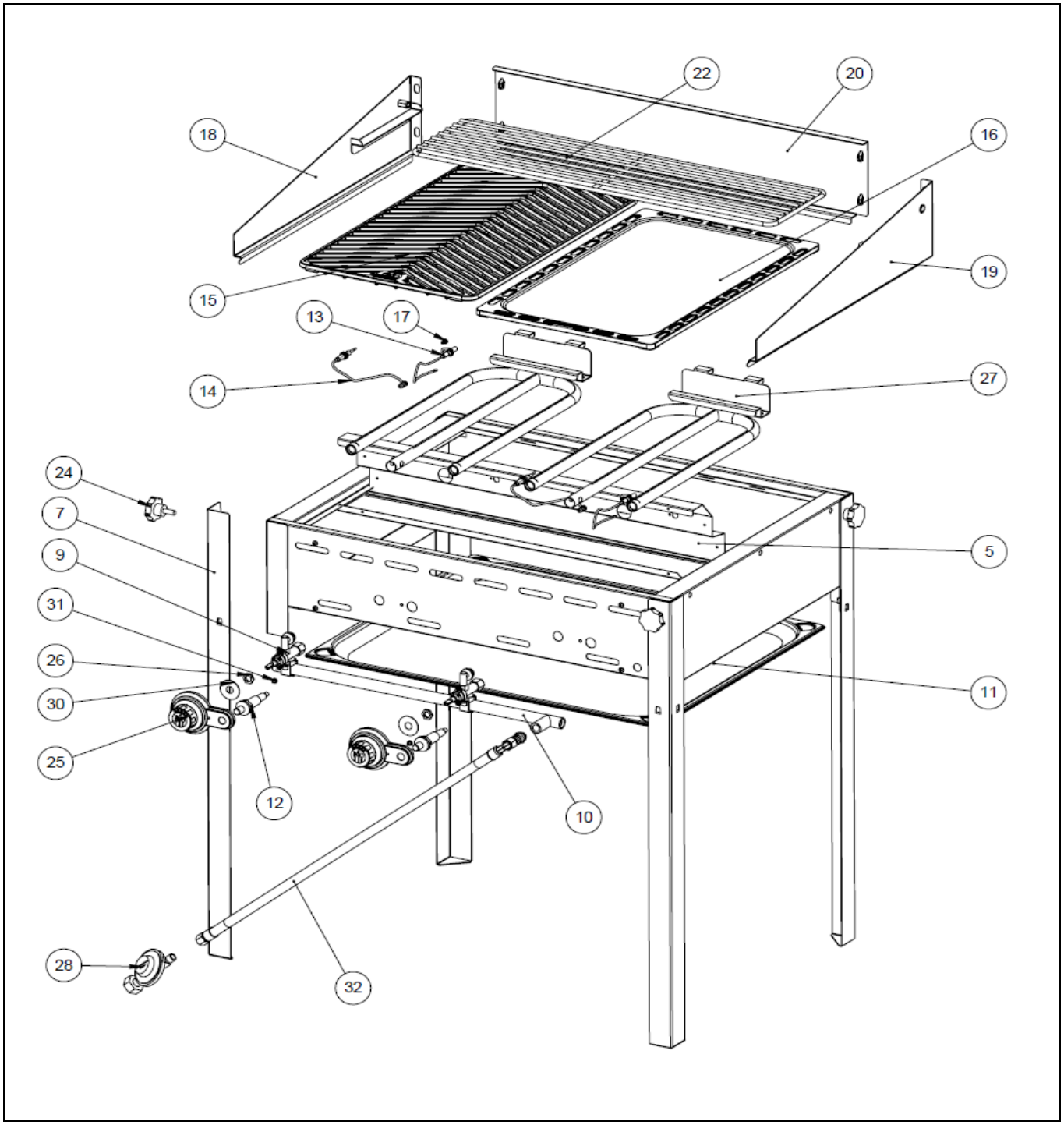

Bill of materials (BOM)

Hendi B.V.
Innovatielaan 6
6745 XS De Klomp
The Netherlands

Batch #	Appliance part#
301291 And up	149508
Description	
Green Fire with 2 burners	

Date	10-04-2025	**Revision #**	Revision version
Revision	First bill of materials (BOM)		

Item	Description	Part#	Quantity	Remark	Picture
1	Frame	n/a	1		
5	Heat shield	n/a	1		
7	Leg	932032	4		
9	Gas valve	932100	2	Incl. item 26	
10	Inlet pipe	n/a	1		
11	Grease tray	806005	1		
12	Piezo igniter (incl nut)	153178	2		
13	Electrode with wiring 190mm	932087	2		
14	Thermocouple	152195	2		
15	Cast iron grid	932018	1		
16	Cast iron griddle	932001	1		
17	Sheet metal screw	n/a	6		
18	Windscreen (left side)	932049	1		
19	Windscreen (right side)	932056	1		
20	Windscreen (back side)	932063	1		
22	Grid	932025	1		
24	Bolt	145128	4		
25	Knob complete	932117	2	(incl. goundplate)	
26	Nut M12x1	922248	2	Also available in 932100	
27a	Gas burner (green fire old model)	n/a	2	Mounting bracket with two single flanges	
27b	Gas burner (green fire new model)	933152	2	Mounting bracket with pin	
28a	Regulator 50mBar	152157	1		
28b	Regulator 37mBar	152188	1		
28c	Regulator 37mBar UK	153161	1	*Note Only for the United Kingdom	
30	Washer	n/a	2		
31	Sheet metal screw	n/a	2		
32	Hose assembly	932094	1	(incl. quick connect coupling)	

n/a **-> not available** **nss** **-> not sold separately**